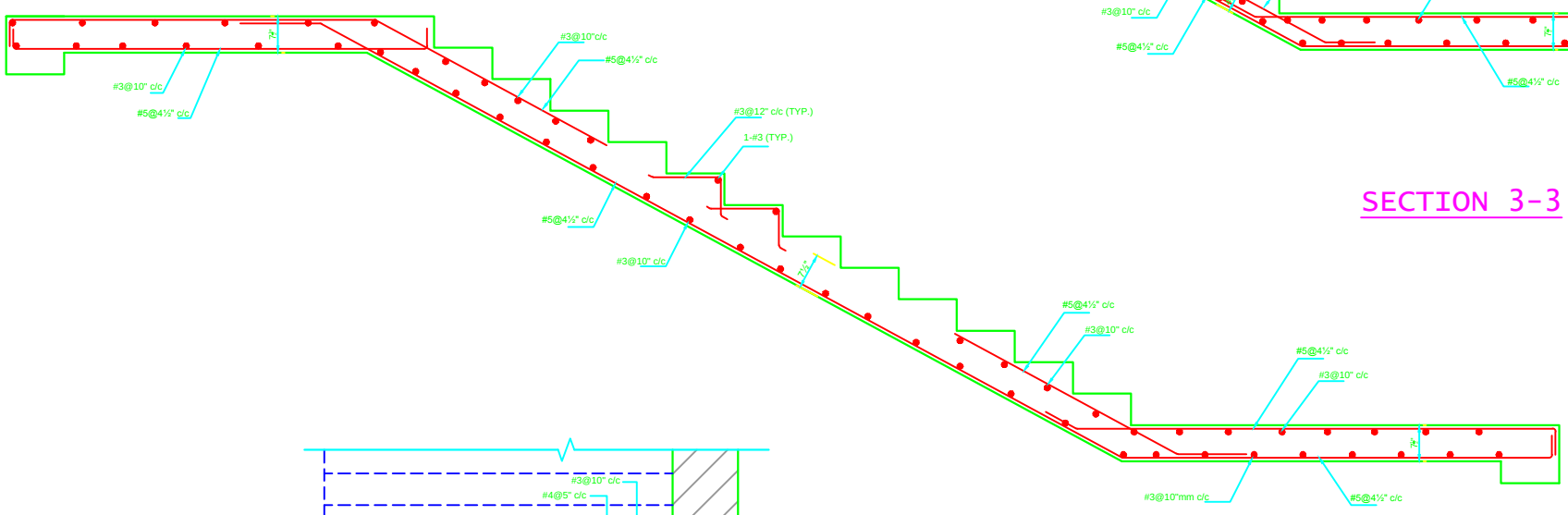

SECTION 2-2

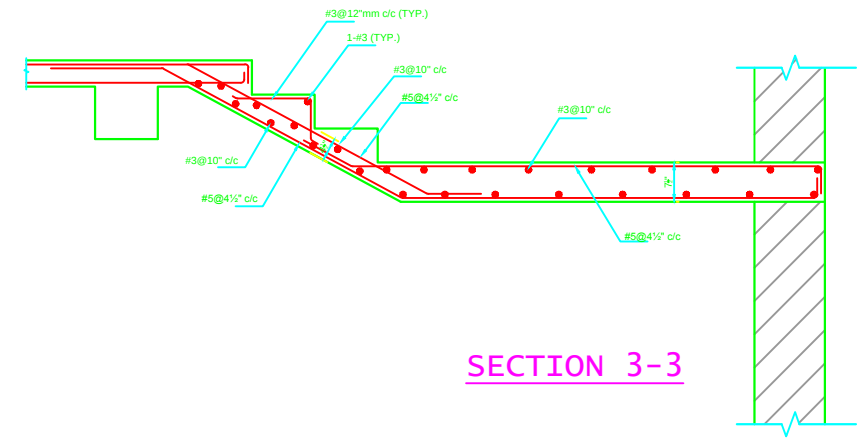

SECTION 3-3

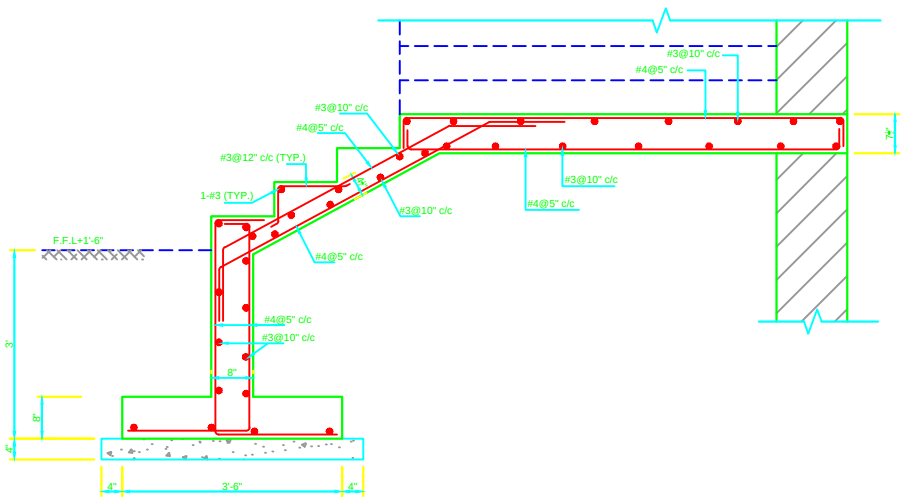

SECTION 1-1

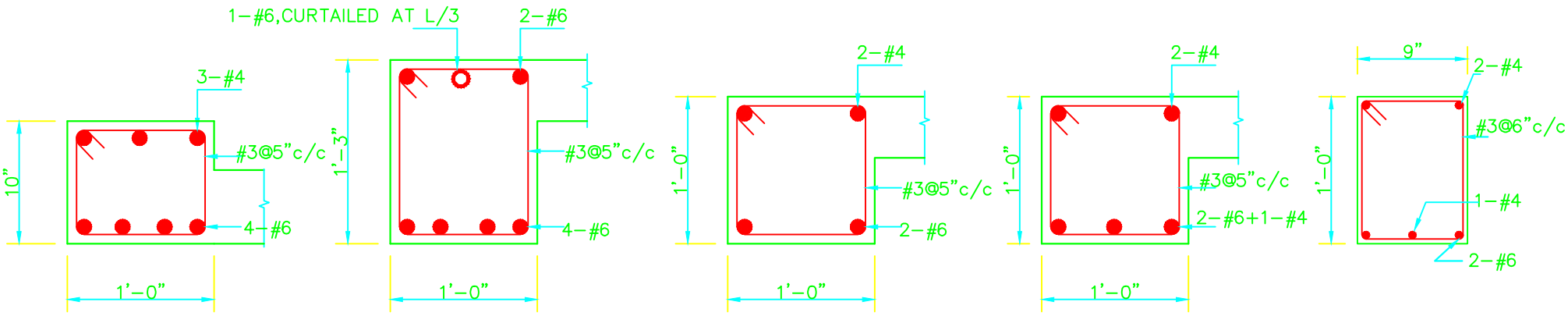

BEAM B1 BEAM B2 BEAM B3 BEAM B4 BEAM B5

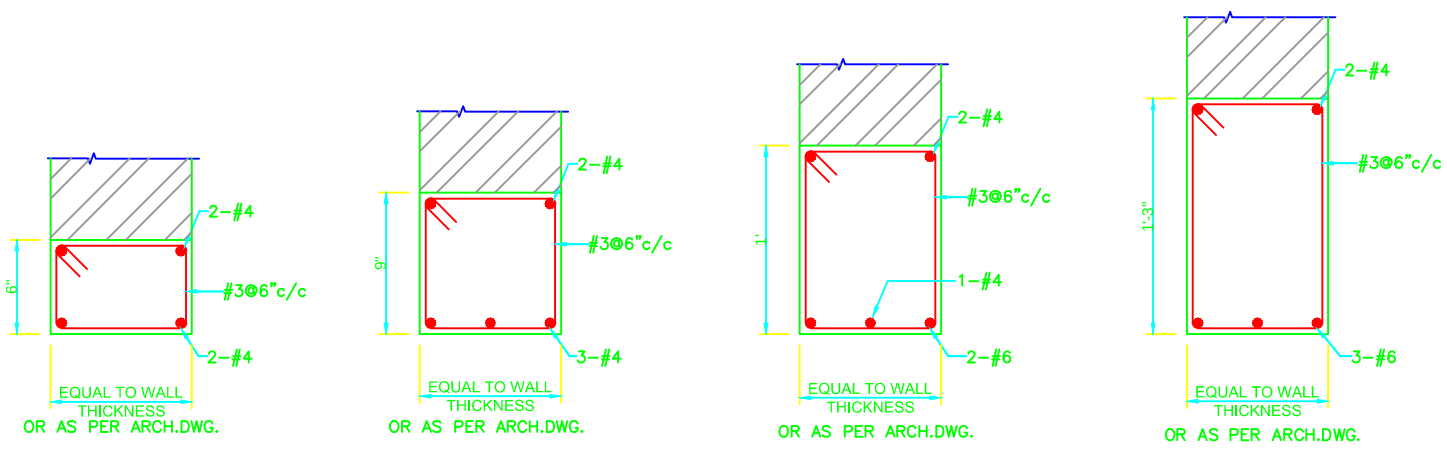

LINTEL L1
NOTE: UPTO 4' SPAN

LINTEL L2
NOTE: FROM 4.25' TO 8' SPAN

LINTEL L3
NOTE: FROM 8.25' TO 12' SPAN

LINTEL L4
NOTE: FROM 12.25' TO 16' SPAN

PROJECT				TITLE	SCALE
3 BED APARTMENT BUILDING AT G.C. UNIVERSITY FAISALABAD. CHINIOT CAMPUS	TALAT JAVED ASSOCIATES ARCHITECTURE, INTERIOR DESIGN, PROJECT EVALUATION & CONSTRUCTION MANAGEMENT. 219/B PCSIR Housing Society Phase I Lahore. Phones: 5420917, Fax: (042) 5420917 E-mail: tjavedassociate@yahoo.com	ENGINEER	WAQAS MAQSOOD	REINFORCEMENT DETAILS	AS SHOWN
		DRAWN	NAVEED		
		CHD./VER.		DATE: SEPTEMBER , 2020	DWG. NO. ST-04
		APPROVED			